USB Signal Isolation Extender Control Chip CH315S

USB Extension Line Control Chip CH315G

USB Signal Isolation Control Chip CH315H

Datasheet
Version: 2B
http://wch.cn

1. Overview

CH315S is a control chip for USB signal isolation and USB signal transmission distance extension. It supports capacitive coupling or network transformer coupling, and realizes the isolation of USB signals, and real-time transfer and transmission distance extension of USB signals.

CH315G is a USB extension cable control chip, used for real-time transfer and transmission distance extension of USB signals.

CH315H is a USB signal isolation control chip, used for photoelectric isolator or magnetoelectric isolator of USB bus.

CH315 supports full-speed USB transmission and low-speed USB transmission, and supports dynamic insertion and removal of USB devices. The figure below shows its general application block diagram.

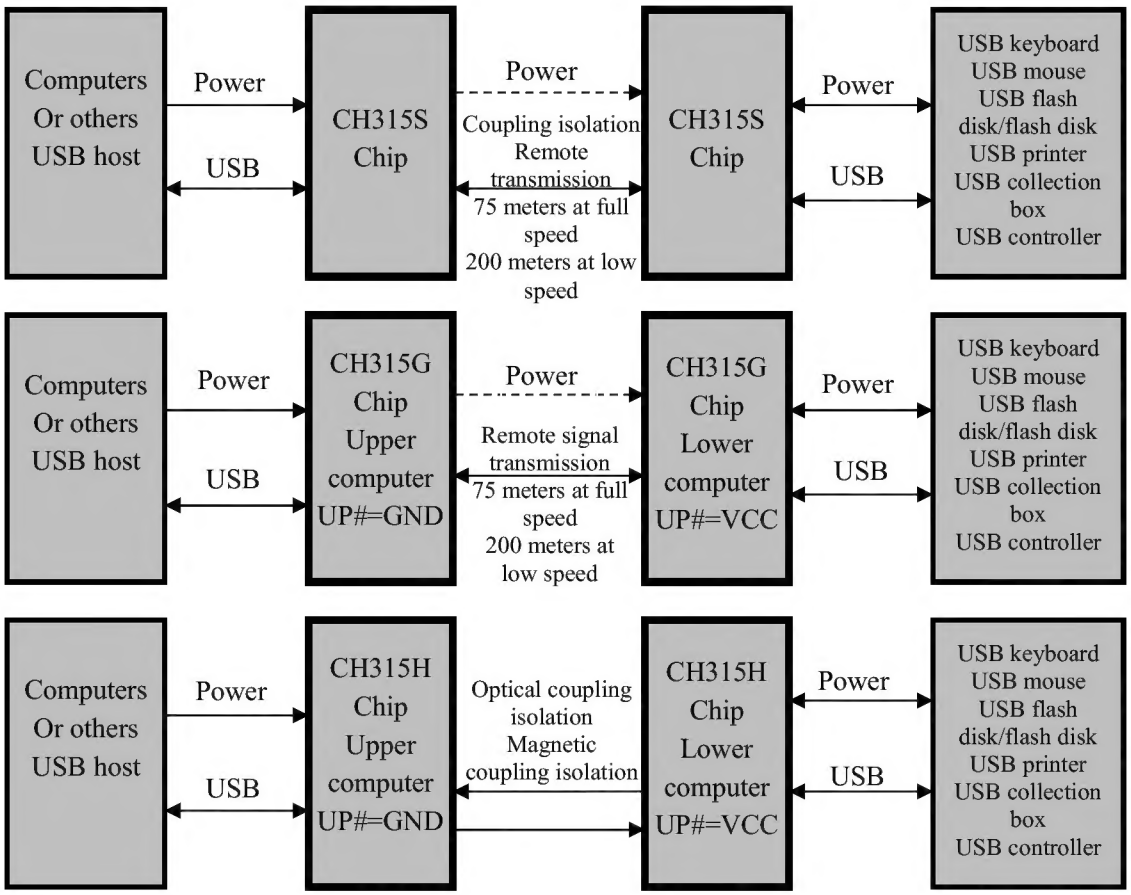

2. Features

- Support 12Mbps USB full-speed transmission and 1.5Mbps USB low-speed transmission,

compatible with USB V2.0.

- Support USB control transmission, bulk transmission, interrupt transmission and synchronous/isochronous transmission.
- Automatically recognize USB Full-Speed or USB Low-Speed. CH315S and CH315H provide USB transmission status indication.
- The chip can be configured as upper computer mode and lower computer mode, connecting with USB-Host and USB-Device respectively.
- The lower computer automatically detects the connection and disconnection of the USB device, and the upper computer automatically simulates the connection and disconnection of the USB device.
- The USB signal line impedance matching series resistance, pull-up resistor at the USB device terminal and pull-down resistor at the USB host terminal are provided internally.
- The PLL and USB clock at the frequency of 12MHz are provided internally, and no external crystal or crystal oscillator is required, so the peripheral circuit is simple.
- CH315S/G has built-in USB signal extension circuit, supports category 5 network cable or Unshielded Twisted Pair, the transmission distance of 12Mbps full-speed USB signal is not less than 75 meters and the transmission distance of 1.5Mbps low-speed USB signal is not less than 200 meters.
- CH315S has built-in current drive circuit coupled with network transformer and drive circuit with capacitive coupling, supporting low-cost capacitors or 10Mbps network transformers.
- CH315H has a built-in optocoupler current drive circuit and supports low-cost 6N137 optocoupler, which will not be affected by electromagnetic field interference in the working environment.
- Pure hardware solution is fully real-time and transparent to the USB protocol. No any additional drive programs are required, and it supports Windows 98/ME/2000/XP/Vista/Win7/8/Server200X/ 64bit-Vista and Linux/Android etc.
- Built-in 3.3V power regulator; support 5V supply voltage (default) and 3.3V supply voltage.
- ESSOP-10 package is used for CH315S, SOP-14 package is used for CH315G and SOP-18 package is used for CH315H, and all of them are compatible with RoHS.

3. Package

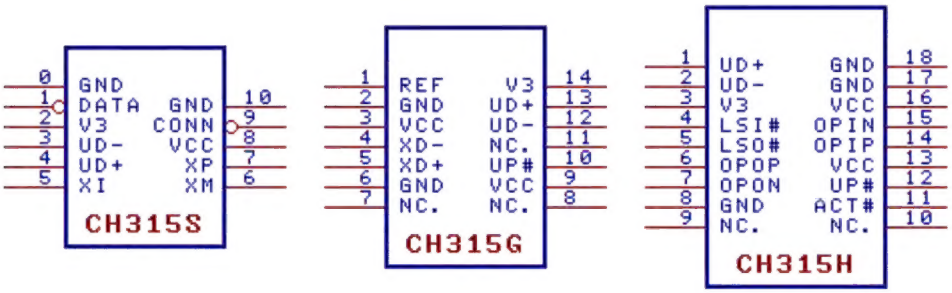

Package	Width of plastic		Pitch of pin		Instruction of Package	Ordering information
ESSOP-10	3.9mm	150mil	1.00mm	39mil	Narrow pitch 10-pin patch with bottom plate	CH315S
SOP-14	3.9mm	150mil	1.27mm	50mil	Standard 14-pin patch	CH315G
SOP-18	7.62mm	300mil	1.27mm	50mil	Standard 18-pin wide patch	CH315H

Note: CH315S is recommended, the chip realizes isolation and extension, and it is automatically configured as the upper computer and the lower computer.

4. Pins

CH315S Pin No.	CH315S Pin No.	CH315S Pin No.	Pin Name	Pin Type	Description
8	3,9	13,16	VCC	Power	Positive power input, requires an external 1uF power decoupling capacitor.
10,0 bottom PAD	2,6	8,17, 18	GND	Power	Common ground, shall be directly connected to the ground wire of the USB bus
2	14	3	V3	Power	USB power input terminal, 3.3V output terminal of internal power regulator. Connected with VCC to input external power at the supply voltage of 3.3V, connected with an external 0.1uF decoupling capacitor at 5V supply voltage
4	13	1	UD+	USB signal	Directly connected to the D+data line of USB bus
3	12	2	UD-	USB signal	Directly connected to the D- data line of USB bus
None	5	None	XD+	Analog signal	Directly connected to the positive end of the differential extension line
None	4	None	XD-	Analog signal	Directly connected to the negative end of the differential extension line
7	None	None	XP	Analog signal	Directly connected to the positive end of the differential extension line through the isolation capacitor or transformer
6	None	None	XM	Analog signal	Directly connected to the negative end of the differential extension line through the isolation capacitor or transformer
1	None	None	DATA#	Output	USB data transmission status output, active at low level
9	None	None	CONN#	Open-drain output	USB connection status output, active at low level, built-in pull-up resistor.
5	None	None	XI	Input	Reference clock input, it is recommended to connect to GND to enable the built-in clock
None	1	None	REF	Reference voltage	The reference voltage of the internal analog circuit needs to be connected to an external divider resistor and decoupling capacitor
None	None	14	OPIP	Input	Isolated transmission P signal input, connected to optocoupler or magnetic coupling P logic output
None	None	15	OPIN	Input	Isolated transmission N signal input, connected to optocoupler or magnetic coupling N logic output
None	None	6	OPOP	Output	Isolated transmission P signal output, connected to optocoupler or magnetic coupling P logic intput
None	None	7	OPON	Output	Isolated transmission N signal output, connected to optocoupler or magnetic coupling N logic input
None	None	5	LSO#	Output	USB transmission speed automatic detection result output, USB low speed 1.5Mbps when low level is detected, and USB full speed 12Mbps when high level is detected.

None	None	4	LSI#	Input	USB transmission speed selection input, USB low speed 1.5Mbps when at low level, and USB full speed 12Mbps when at high speed.
None	10	12	UP#	Input	Mode selection input, with built-in pull-up resistor, Upper computer mode when at low level, and lower computer mode when at high level.
None	None	11	ACT#	Open-drain output	USB transmission status output, active at low level, with built-in pull-up resistor.
None	7,8,11	9,10	NC.	Idle pin	No connection

5. Functional Specification

USB power can be directly used for CH315 chip. When 5V supply voltage is used, V3 pin is connected with a power decoupling capacitor having a capacity of about 0.1uF. When a 3.3V supply voltage is used, the V3 pin shall be connected to the VCC pin, and the external 3.3V power will be inputted in the meantime.

Category 5 or Unshielded Twisted Pair (network cable) or USB signal cable and similar differential signal twisted pair can be used for CH315S/G chip. If the characteristic impedance of the signal line does not match, then a resistor is requires to be connected with the output pin in series or in parallel.

The transmission distance of CH315S/G is related to the quality of the transmission line. When an ordinary network cable is used, the transmission distance of low-speed USB signal will be no less than 200 meters and the transmission distance of full-speed USB signals shall be no less than 75 meters. The DC resistance of an ordinary network cable is generally less than 10Ω per 100 meters. The excessive DC resistance will affect the transmission distance, and affect the USB power supply voltage and increase the ground voltage of the device.

Two high-frequency capacitors with a capacity of 0.022uF～0.47uF can be used for CH315S to transmit signals in a differential manner and isolate the DC voltage. The isolation voltage is determined by the withstand voltage of the capacitor. It is recommended that the pressure difference between the two ends shall not be too large. There is no need to consider the withstand voltage when the two ends share the ground and only extend.

For CH315S, a network transformer can be used to transmit signals in a differential manner and isolate the DC voltage. The isolation voltage is determined by the withstand voltage of the transformer. It is recommended to choose a network transformer with a withstand voltage of no less than 2KV and a rate of no less than 10Mbps. The anti-interference effect and withstand voltage performance of transformer coupling are superior to the capacitive coupling.

The transmission distance of CH315S/G is also related to the time characteristics of the USB host in the computer chipset. For a full-speed USB signal, the response time of electron to and fro in the transmission line cannot exceed the waiting time of the computer (a few hundred nanoseconds), limiting the transmission distance accordingly.

The DATA# pin of the CH315S chip is the status output of the USB transmission in progress. It can drive the LED to indicate the USB transmission after a current-limiting resistor is connected in series. The CONN# pin is the USB connection status output, which can be connected in series with a current-limiting resistor to drive the LED to indicate whether the USB is connected, or to control the power supply of peripherals.

The ACT# pin of the CH315H chip is the status output of the USB transmission in progress, and an external LED can be connected to indicate the USB transmission.

CH315H supports common high-speed optocouplers (4 single-channels or 2 dual-channels) with a

transmission rate greater than 10Mbps. The isolation voltage is determined by the optocoupler. The typical isolation voltage of 6N137 is 5000V. CH315H also supports magnetic couplers. It is recommended to use optical couplers, which will not be affected by electromagnetic field interference in the working environment.

CH315 is a pure hardware solution for USB signal line extension and USB signal electrical isolation. It complies with relevant technical specifications and is completely transparent to the USB protocol. For the CH315 chip itself, any additional drive program does not need to be installed, but a drive program may need to be installed for the USB device itself. The procedure is the same as that before the extension or isolation. No drive program is required for ordinary USB devices such as USB flash disk, keyboard and mouse.

CH315 can automatically recognize full-speed USB and low-speed USB, support plug and play, and can automatically detect and simulate the connection and disconnection of USB devices. CH315S/G can be used to make USB active extension cables, extend USB transmission distance, and realize remote signal acquisition and online control; CH315S/H can be used to make USB signal isolators, reduce signal interference, and improve the accuracy of signal acquisition.

6. Parameters

6.1. Absolute Maximum Value

Critical value or exceeding the absolute maximum value may cause the chip to work abnormally or even be damaged.

Name	Parameter description	Min.	Max.	Unit
TA	Ambient temperature during operation	-40	85	℃
TS	Ambient temperature during storage	-55	125	℃
VCC	Supply voltage (VCC connects to power, GND to ground)	-0.5	6.0	V
VIO	Voltage on the input or output pins	-0.5	VCC+0.5	V

6.2. Electrical Parameters

Test conditions: TA=25℃, VCC=5V, excluding the pins connected to USB bus.

Name	Parameter description	Min.	Typ.	Max.	Unit
VCC	Supply voltage (VCC=5V or VCC=V3=3.3V)	3.2	5	5.3	V
ICCs	Static supply current		3	6	mA
ICCa	Operating supply current		30	100	mA
VIL	OPIP/N low-level input voltage	-0.5		0.8	V
VIH	OPIP/N high level input voltage	2.0		VCC+0.5	V
VOL	OPOP/N low-level output voltage (8mA draw current)			0.5	V
VOH	OPOP/N high-level output voltage (8mA output current)	VCC-0.5			V
IUPup	Input current of built-in pull-up resistor of UP# pin	3	150	300	uA
IUPact	Input current of built-in pull-up resistor of CONN# and ACT#	100	230	800	uA
ILED	Continuous draw current of DATA#, CONN# and ACT#		2	8	mA
Lfs	Extended distance of full-speed USB signal	70	75		m
Lls	Extended distance of low-speed USB signal	150	200		m

7. Applications

7.1. USB Active Extension Line Isolated by Network Transformer (Figure below)

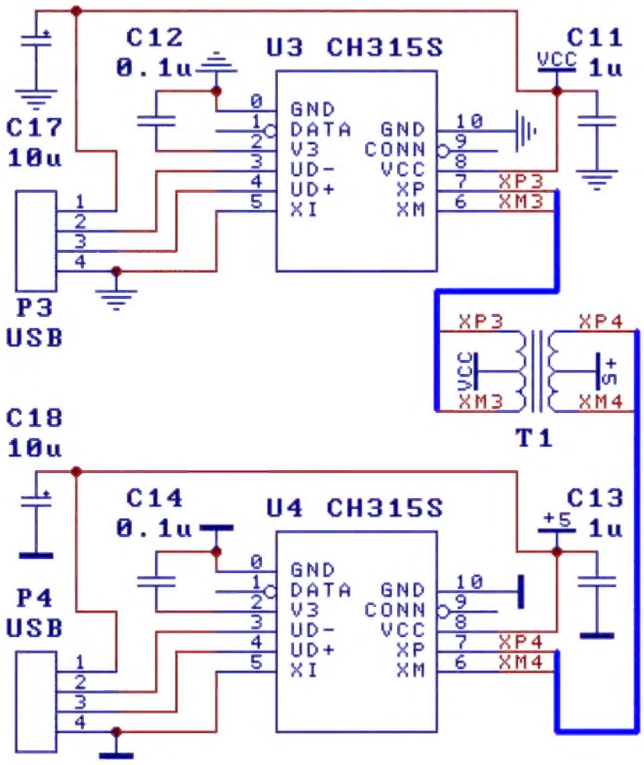

The figure above is a simplified version of the USB isolation extension line realized by two sets of CH315S.

The two groups of CH315S are completely symmetrical and can be automatically identified as uplink ports or downlink ports.

The upper port is used as a host computer to connect to a computer or other USB Hosts. The CH315S of the upper computer is connected to the the ground jointly with the computer or USB host, and they can optionally share the power.

The lower port is used as the lower computer to connect to USB-Device devices, such as USB keyboard, USB mouse, USB flash disk, USB data acquisition box and USB controller. The CH315S and other circuits of the lower computer are jointly connected to the ground with the USB device, and they can optionally share the power.

A set of electrical connecting line is between the upper computer and lower computer. Generally, the general network cable (category 5 or Unshielded Twisted Pair) is used for connection, and the connection lines include two differential signal lines, XP and XM, and an optional common ground line (it is recommended to connect to GND common ground line). The network transformer T1 is used for signal isolation and improving the anti-interference capacity at the same time, and the center tap is connected to the power supply at the respective terminal. If the upper computer and the lower computer are each equipped with a network transformer, then the two network transformers will be directly connected with a network cable, and the center tap of the non-chip side will be suspended.

In applications where isolation is not required, if there are remaining signal wires, they can also be used as additional ground wires or power wires. Refer to the RJ45 wiring diagram in section 7.2.

Capacitors C12 and C14 have a capacity of 0.1μF and are used for decoupling the internal power node of the CH315S. The capacity of C11 and C13 is 1μF and used for the power decoupling of CH315S chip. The working current is large, and it is recommended to add a large-capacity capacitor to provide power

decoupling for the USB port.

The USB port includes P3 and P4. The USB bus includes a pair of 5V power lines and a pair of data signal lines. Generally, the +5V power line is red, the ground line is black, the D+ signal line is green, and the D- signal line is white.

When designing a printed circuit board (PCB), you need to notice that: The decoupling capacitors C11, C12, C13 and C14 shall be as close as possible to the connected pins of CH315S. Provide a reasonable path and line width for the ground wire and power; D+ and D- signals lines of USB are close to parallel wiring, so that the XP and XM signal lines are close to parallel wiring. The ground wire or cladding copper shall be provided on both sides to reduce signal interference from the outside.

7.2. USB Active Extension Line with Capacitive Coupling (Figure below)

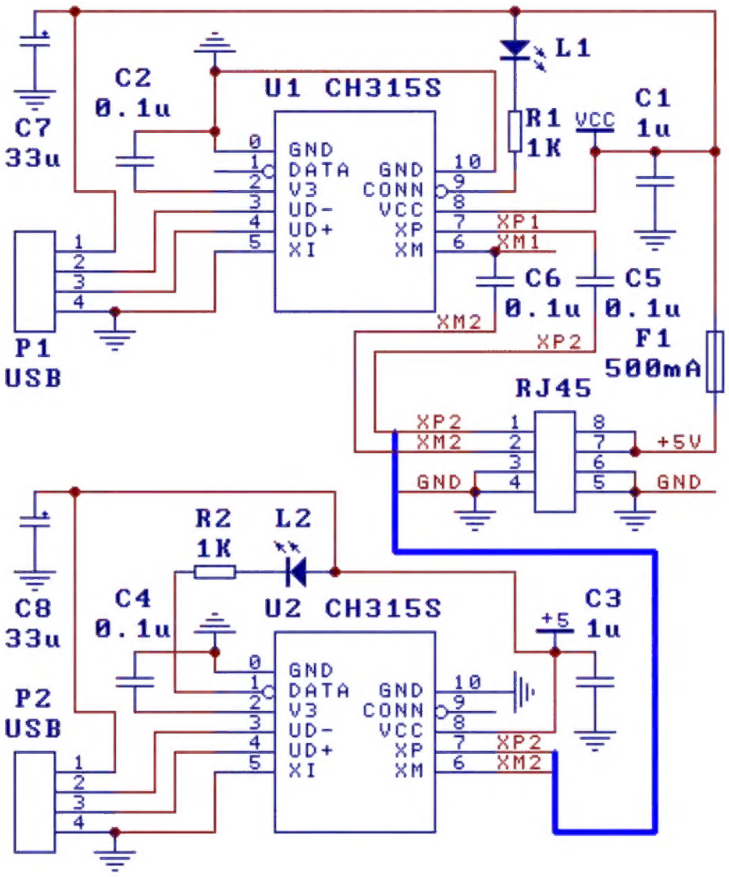

The figure above is a capacitive coupling USB extension line realized by two sets of CH315S.

The upper computer includes U1, P1, etc., and the upper port P1 is used to connect to a computer or other USB Host.

The lower computer includes U2, P2, etc. The lower port P2 is used to connect to the USB Device.

In fact, the two sets of CH315S are completely symmetrical. When the power supply characteristics are not considered, it is not necessary to distinguish between the upper computer and the lower computer.

The LEDs L1 and L2 in the figure are respectively used to indicate that the USB device is connecting and USB data transmission is in progress.

If it is only extended without isolation, then for the ordinary 8-core network cable, it is recommended to refer to the RJ45 diagram in the figure: two differential signal wires, 4 ground wires and 2 power wires. The power wire can be used to provide +5V power to the USB device at the same time. However, due to the

voltage drop of the DC resistor of the network cable, especially when the USB device consumes a large amount of current. When the actual power voltage at the USB device is usually less than 5V and even some of the USB devices may not work normally accordingly, so it is necessary to provide independent power supply to the lower computer.

The figure only shows the signal isolation. For the complete isolation, the isolation between the power supply and ground shall be also processed. The isolation withstand voltage is decided by the capacitors C5 and C6. Generally, the capacitive coupling scheme is only suitable for non-isolated extensions (low dropout or common ground). It is recommended to consider the network transformer scheme for long-distance or high-voltage isolation.